REV.	DESCRIPTION	DRAWN	CHECKED	APPROVED
A	NEW RELEASE	ZQJ 11/18/2015	~	ZQJ 11/18/2015
B	ADD P/N CODE	CJJ 11/18/2015	~	CJJ 11/18/2015

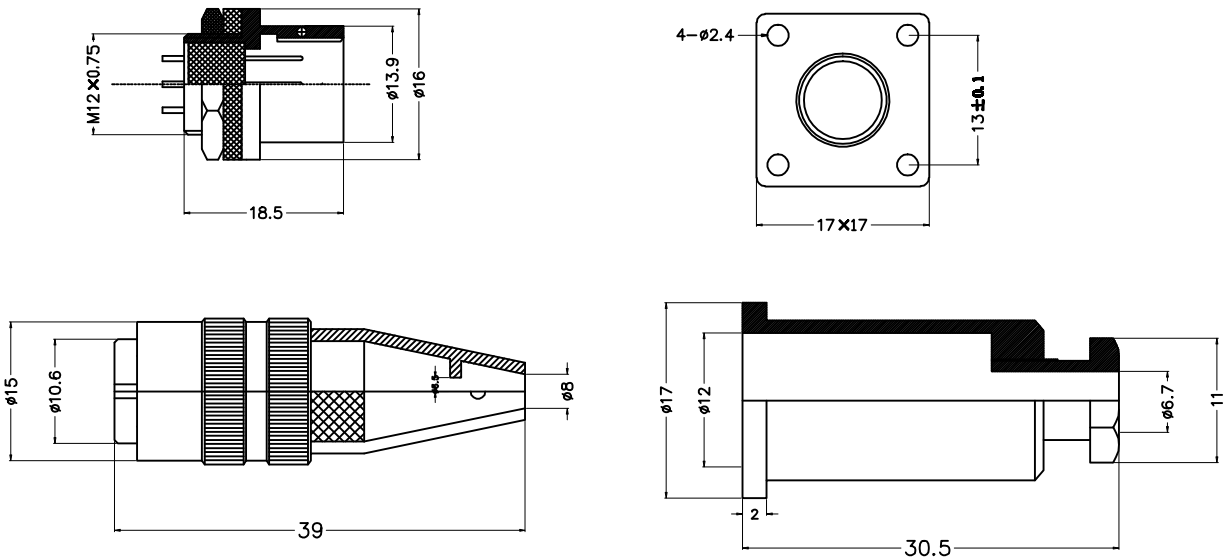

XS12 系列金属软管式 2T-7T

外形尺寸 Shell size	XS12-2 插座 插头	XS12-3 插座 插头	XS12-4 插座 插头	XS12-5 插座 插头	XS12-6 插座 插头	XS12-7 插座 插头
接触件排列 Contact Arrangements						
额定电流/电压 Current rating/voltage	3A	3A	3A	3A	3A	3A
额定电压 Withstand voltage	AC800V a minute	AC800V a minute	AC800V a minute	AC800V a minute	AC800V a minute	AC800V a minute
绝缘电阻 Insulation resistance	AC500V Ω a minute	AC500V Ω a minute	AC500V Ω a minute	AC500V Ω a minute	AC500V Ω a minute	AC500V Ω a minute
接触电阻 Contact resistance	mΩ MAX	mΩ MAX	mΩ MAX	mΩ MAX	mΩ MAX	mΩ MAX

GENERAL TOLERANCE		ANGLE TOLERANCE	
X.	±0.60	X.	±5°
.X	±0.38	.X	±3°
.XX	±0.25	.XX	±2°

PROJECTION		TITLE	XS12 Micro Jack Connector
UNITS	mm		
SHEET SIZE	A4	SERIES	XS12 金属软管式

ITEM	PART NAME
2	CONTACT
1	HOUSING

DRAWING TYPE	CUSTOMER		
SCALE	1:1	SHEET	1 OF 1
DRAWING NO.			

LANL 蓝翎电子

慈溪蓝翎电子有限公司
CIXI LANLING ELECTRONICS CO.,LTD.